Data sheet

Commercial Art.No.: 5D.S50.1655.0

high current terminal WRTN 50 U

high current terminal WRTN 50 U rated voltage 1000 V, rated current 150 A, bolt connection, number of levels 1, number of clamp positions per level 3, nominal cross section 50 mm², connectable conductor cross section fine stranded without cable end sleeve 2,5mm² - 50mm², mounting method DIN rail (top hat rail), color grey, width/grid dimension 27 mm, inflammability class of insulation material acc. with ul94 V0

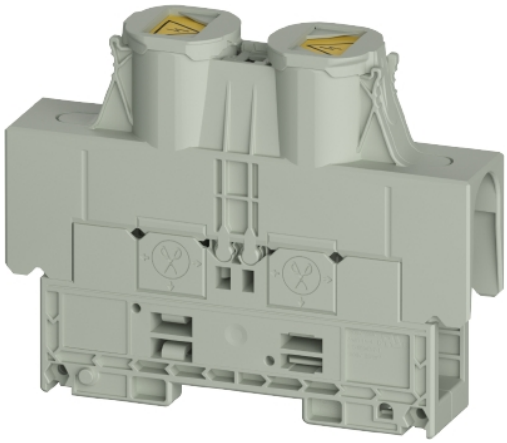

Commercial Art.No.	5D.S50.1655.0
EAN	4049088725616
Order Unit	5

certificates / approvals

Technical data

general

nominal cross section	50 mm²
color	grey
number of levels	1
number of clamp positions per level	3
width/grid dimension	27 mm
insulating housing	PA
inflammability class of insulation material acc. with UL94	V0
mounting method	DIN rail (top hat rail)
connection type	bolt connection
number of clamp positions per level	3
mounting method	DIN rail (top hat rail)
inflammability class of insulation material acc. with UL94	V0
halogen free	yes

technical data

rated current	150 A
rated voltage	1000 V
rated impulse voltage	8 kV
closing plate required	no
type of insulation material	thermoplastic
length	126.8 mm
width	31 mm
height	101.5 mm

connection data

connection type	bolt connection
connection type 1	screw connection
minimum cross section solid	2.5 mm²
maximum cross section solid	50 mm²
minimum cross section fine stranded	2.5 mm²
maximum cross section fine stranded	50 mm²
torque conductor mounting	10 Nm

technical data UL/CSA

cross section UL	14-1/0 AWG
voltage UL	1500 V
current factory wiring	150 A
current field wiring	150 A
cross section CSA	14-1/0 AWG
voltage CSA	
current CSA	150 A

classification

ETIM 9.0	EC000897

product compliance

ROHS conformity status	compliant
REACH-SVHC conformity status	compliant

Accessories

Commercial Art.No.:	Article-type description:	Description:
0D.S25.3227.0	jumper bar VB WRTN 25-2	jumper bar VB WRTN 25-2 modular spacing 27 mm, insulated no, number of poles 2, color grey, height 3 mm, mounting method screwable, inflammability class of insulation material acc. with ul94 V0
0D.S25.3327.0	jumper bar VB WRTN 25-3	jumper bar VB WRTN 25-3 modular spacing 27 mm, insulated no, number of poles 3, color grey, height 3 mm, mounting method screwable, inflammability class of insulation material acc. with ul94 V0
0D.202.7281.0	marking strips WML 9.8/60	marking strips WML 9.8/60 material plastic, color white, length 230 mm, height 15.1 mm, inflammability class of insulation material acc. with ul94 V0
0D.210.7056.0	marking plate WMP 10-10	marking plate WMP 10-10 modular spacing 10 mm, material plastic, color white, length 128 mm, height 76 mm, mounting method snap-on, inflammability class of insulation material acc. with ul94 V0

© Alle Rechte vorbehalten
© All rights reserved
Vertraulichkeitsklasse: Vertrauich
Confidentiality Class: Confidential

These dimensions will be especially checked at delivery
Only inspection dimensions
With /E marked dimensions are only valid for internal use

Diese Maße werden bei Abnahme besonders geprüft
Ausschließlich Prüfmaße
Mit /E gekennzeichnete Maße sind nur für interne Zwecke gültig

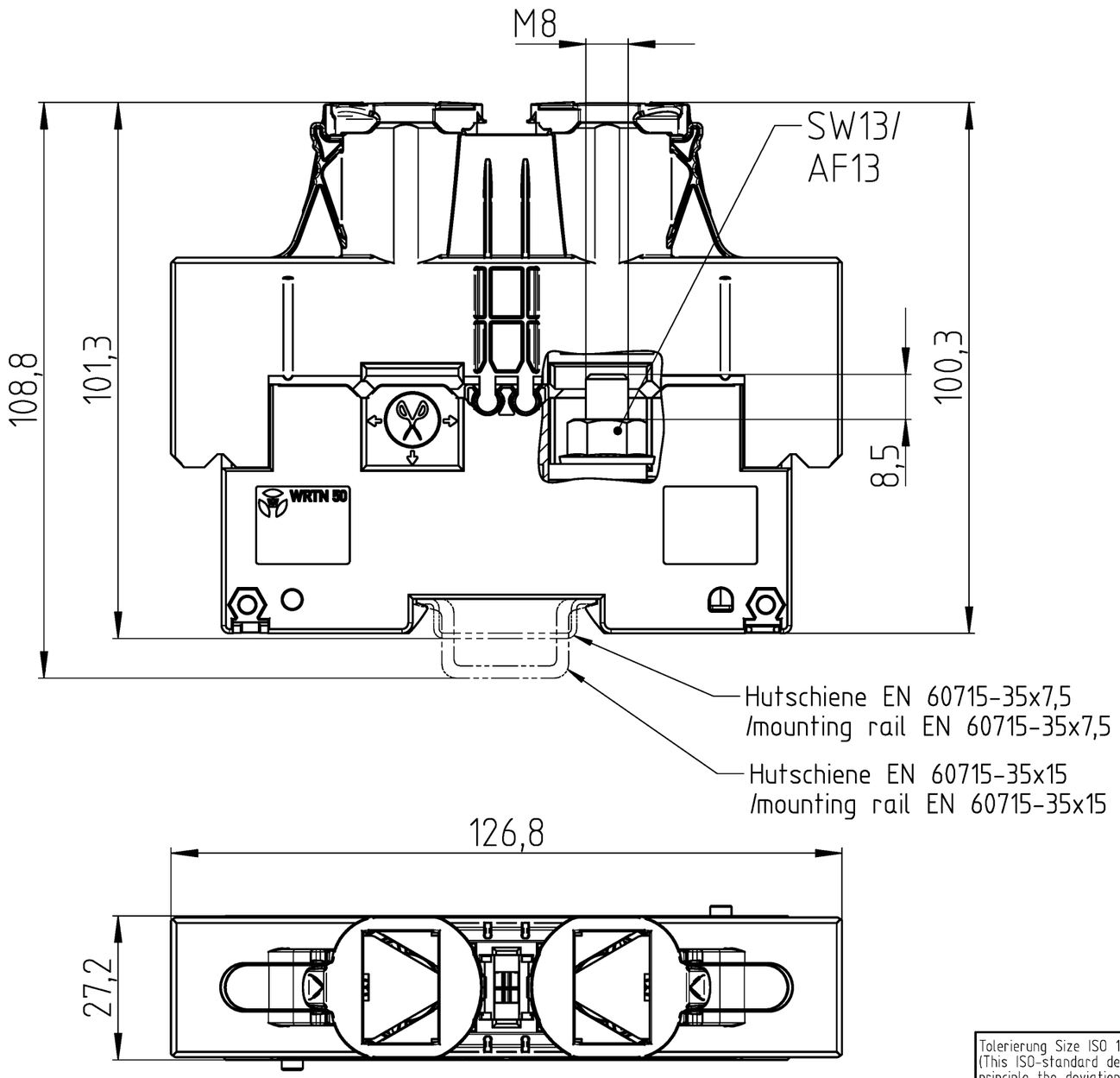

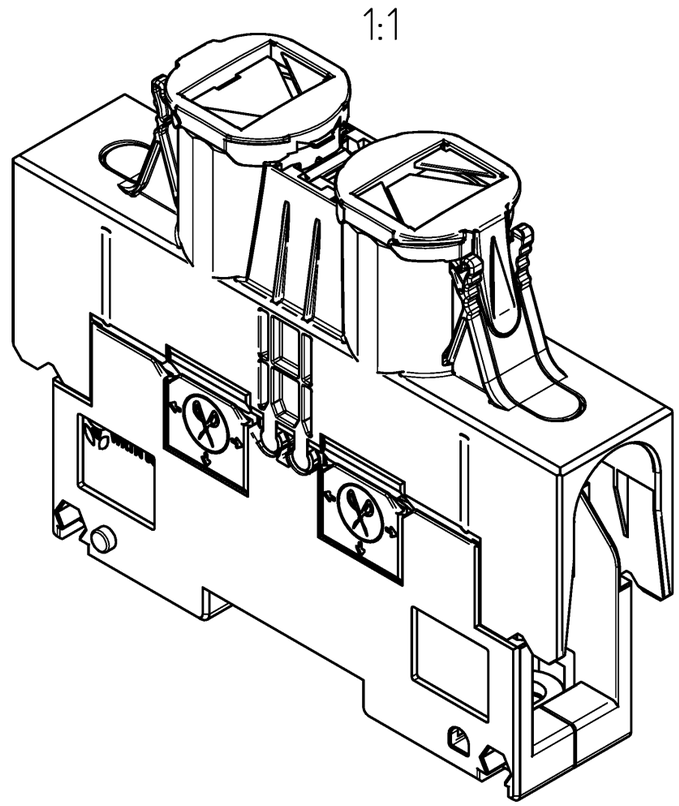

Weitere Daten siehe KATALOG oder eKatalog
additional data see CATALOG or eCATALOG

www.wieland-electric.com
eshop.wieland-electric.com

Tolerierung Size ISO 14405 Ⓔ / Tolerance system Size ISO 14405 Ⓔ.
(This ISO-standard describes the envolope principle. According to the envolope principle the deviations of form and parallelism are limited by the size tolerances).

ja/yes ☒ Stoffverbots- und Deklarationsliste nach WN 5020.010 ist einzuhalten.
Conformity with Wieland document WN 5020.010 e (list of prohibited / declarable hazardous substances) to be declared!

Freitoleranz nach
General tolerance

CAD - Zeichnung, keine manuellen Änderungen
CAD - drawing, no manual modifications allowed

1. Verwendung:
First Use:

Blatt: 1 von 1
Sheet: 1 of 1

	/	Werkstoff / Material		Tag/Date	Name	Zeichnung Nr. / Drawing No.	Index
	/		gezeichnet drawn	18.09.2025	Sachs (extern)	5D.S50.1655.0 13K	a
	/	Maßstab / Scale 1:1	Elektronische Freigabe Electronic Release			Maße in mm / Dimensions are in mm	
	/	Vol. mm³	Ofl./Srf. mm²	Ersatz für / Replacement for:			
	/						
a	29.04.2026 /	wieland		Type	Benennung/Title HOCHSTROMKLEMME high current terminal		
Index	Datum / Blatt Date / Sheet						
Änderung / Revision							

Bestell-Nr. /order no.	Typ /type	Farbe /colour
5D.S50.1655.0	WRTN 50 U	grau / grey